E26 Bulb Indoor Luminaires
Wall Mount – Vanity
120VAC / 60Hz

Model #: LEOVxxxxMBxx

Safety Precautions

- Read all safety precautions and installation instructions carefully before installing or servicing this fixture. Failure to comply with these instructions could result in potentially fatal electric shock and/or property damage.
- It is recommended that a qualified electrician perform all the wiring. This fixture must be wired in accordance with all national and local electrical codes.
- Do not handle any energized fixture or attempt to energize any fixture with wet hands or while standing on a wet or damp surface or in water.
- This fixture is designed for use in a 120VAC / 60Hz circuit.
- Make sure that the power source conforms to the requirements of the fixture. (See labels on the fixture housing).
- To reduce the risk of electrical shock, and to assure proper operation, this fixture must be adequately grounded. To accomplish proper grounding, there must be a separate ground wire (green) contact between this fixture and the ground connection of your main power supply panel.
- This fixture is intended to be used for general indoor lighting in dry or damp locations.

Assembly Instructions

Step 1 – Preparing for installation

A. **Disconnect electrical power** at the fuse or circuit breaker box before installing or servicing any part of this fixture.
B. Carefully remove the fixture and hardware kit from the carton.
C. Remove components from the hardware kit.
D. Remove mounting bracket (1) from the fixture (3) by removing two barrel nuts (5).
E. Install the mounting bracket (1) to the 3-0 or 4-0 junction box (not included) using two screws (2) to secure it.

Wiring – All wiring must take place inside the junction box (not included)

Caution: Make sure power is off at the fuse or circuit breaker box. Check power wires for damage or scrapes. Use wire suitable for at least 90°C (194°F). **Note:** Most dwellings built before 1985 have supply wire rated to 60°C. Consult a qualified electrician to ensure correct branch circuit conductor before installing.

Step 2 – Wiring fixture

A. Make all wire connections to appropriate wire. Secure with wire nuts (provided).
B. Connect the green wire from the fixture to the supply source ground wire.
C. Connect the black wire from the fixture to the black (L) wire from the supply power source.
D. Connect the white wire from the fixture to the white (N) wire from the supply power source.
E. **Do not mix wires.** Pull on each wire lead to make sure connections are secure. Make certain no bare wires are exposed outside of wire connectors. Tuck all connections neatly into the junction box.

Step 3 – Mounting fixture

A. Install the fixture (3) by aligning the front two holes to the threaded studs (4) then using two barrel nuts (5) to secure it.
A. .

Step 4 – Install shade

A. Place the glass shade (6) over the socket then use retaining nut (7) to secure it. Repeat until all glass shades are installed.

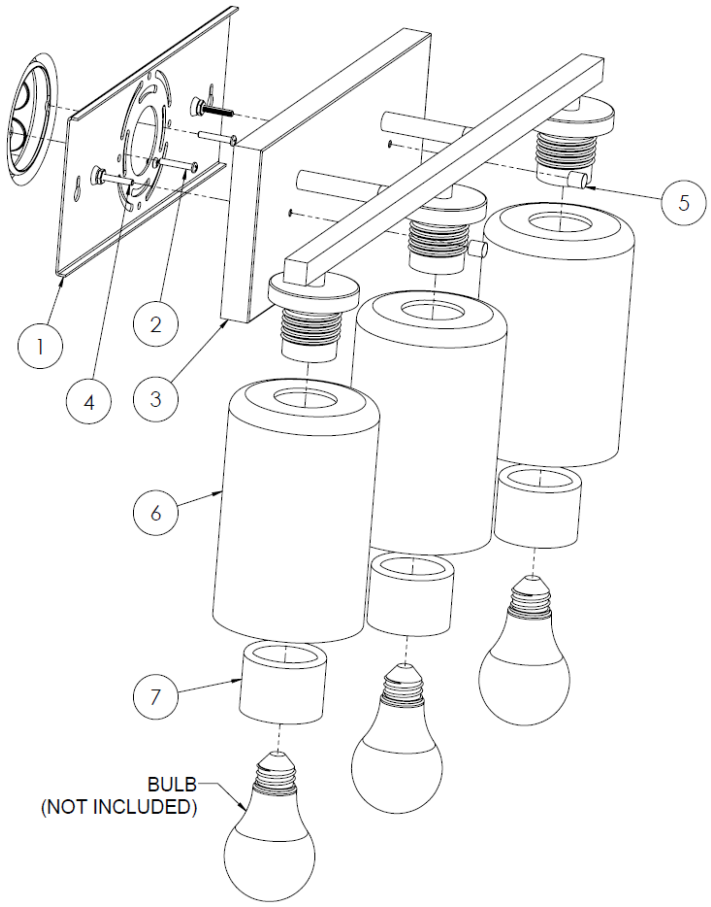

View shown for reference only. Individual models may vary. Note: Fixture can be installed with glass shade facing up or down.

Step 5 – Lamping

A. Install E26 bulb 60W Type A19 (not included) into the socket then gently turning clockwise to secure it. Repeat until all bulbs are installed. Do not overtighten.

Step 6 – Restore power at the fuse or circuit breaker box

Limited Factory Warranty
AFX Inc. hereby warrants that this fixture is free from defects in materials and workmanship when installed and used under normal operating conditions for a period of 2 years from date of purchase. This warranty covers all component parts and extends only to replacement of defective fixture or components; it does not cover failure due to improper installation, misuse, mishandling or damage incurred in transit.

2345 N. Ernie Krueger Circle Waukegan, IL 60087

8061768 R0